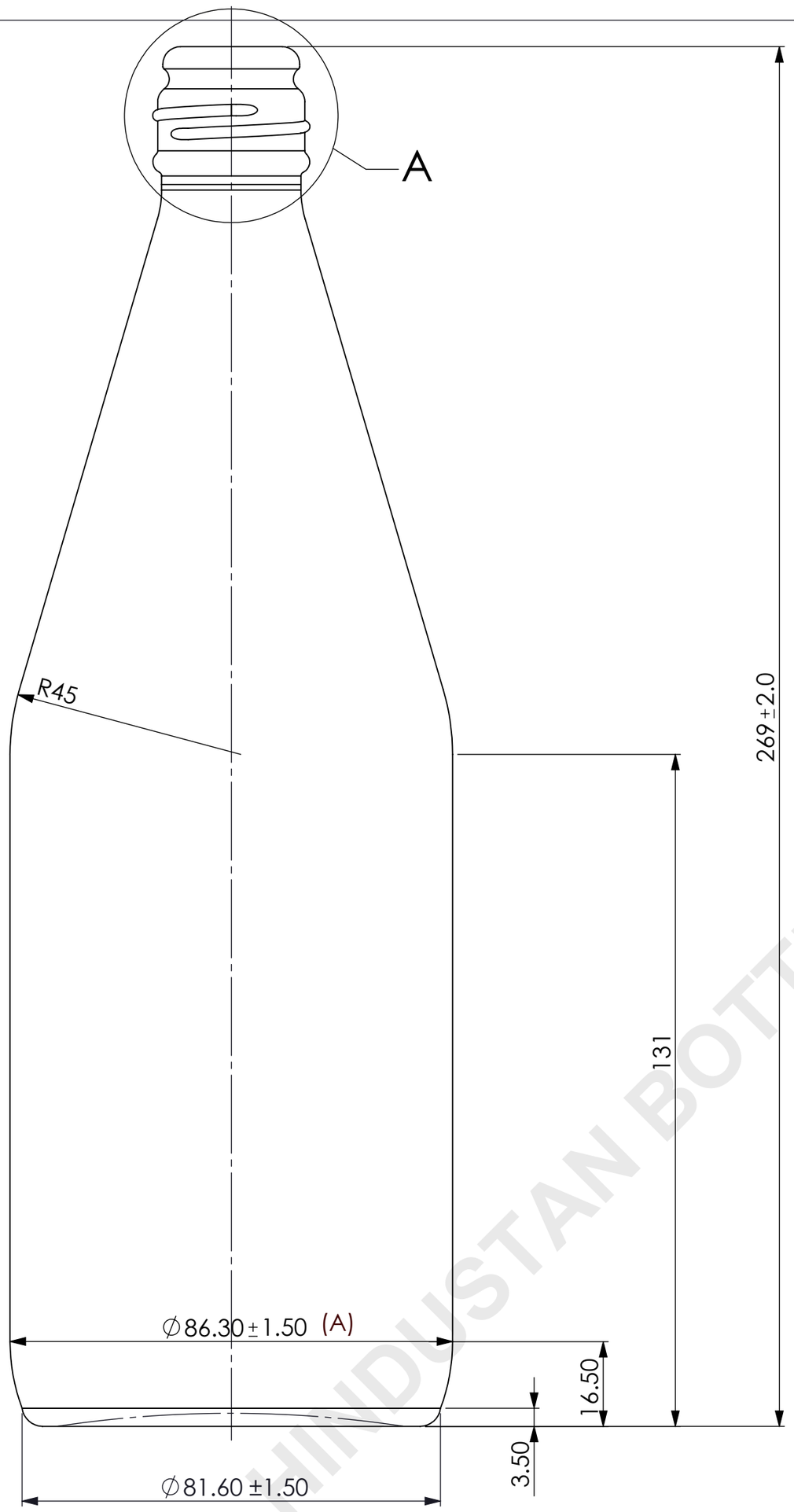

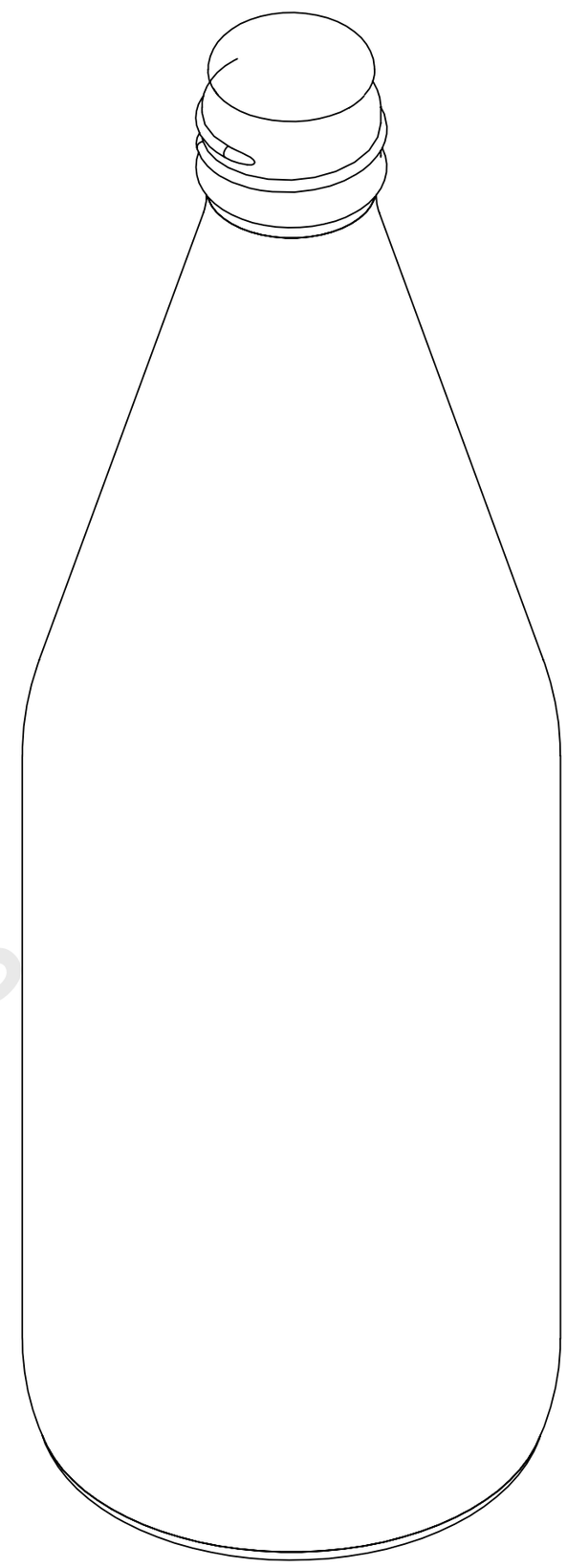

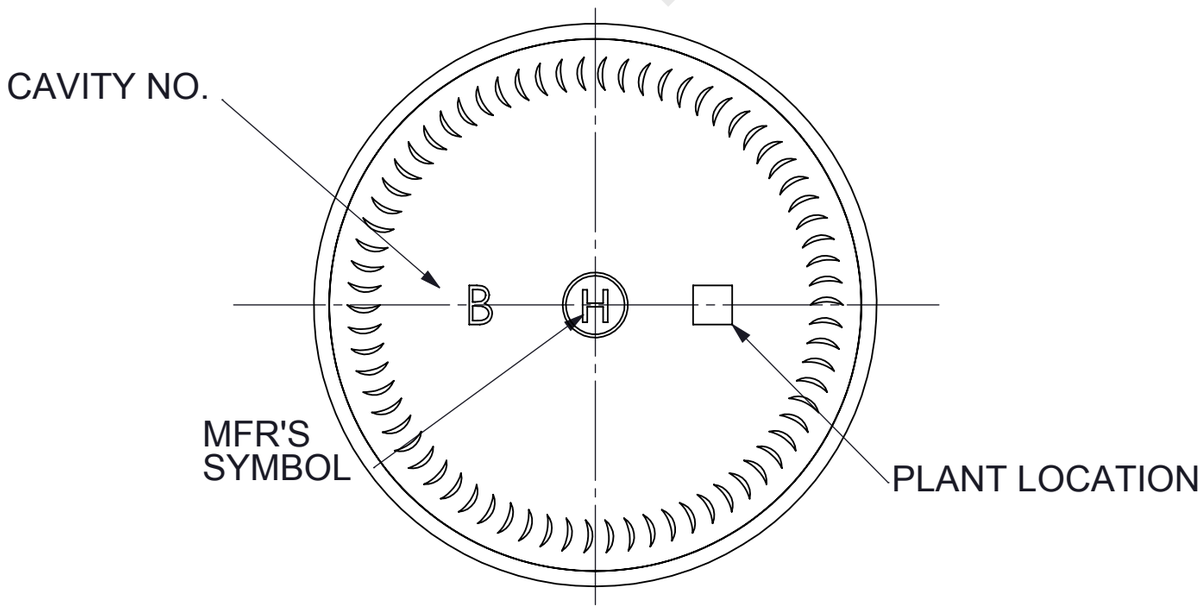

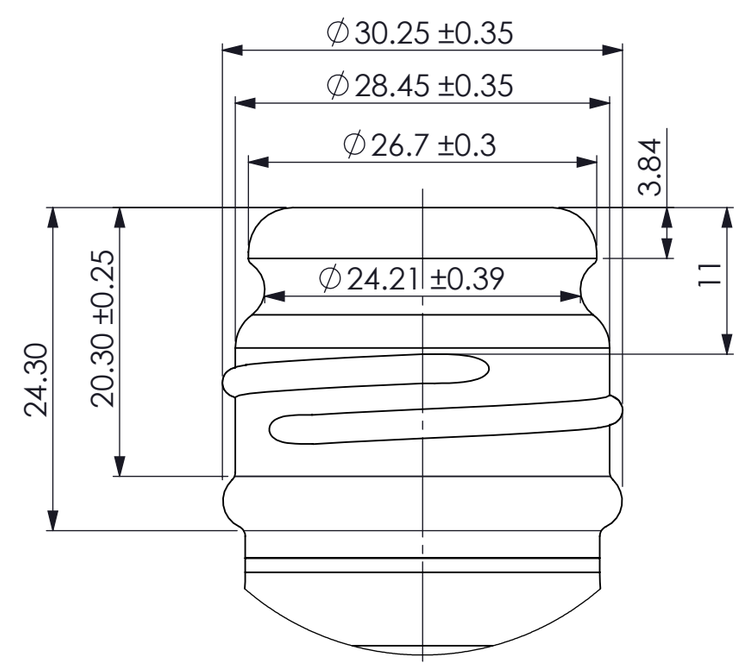

DETAIL A

ALL DIMENSIONS ARE IN MILLIMETERS

HINDUSTAN BOTTLES

PROCESS	B & B						
MINIMUM THROUGH BORE		B			NECK FINISH DETAIL ADDED	09.12.09	
FILL POINT VERIFIED		A	2.	E–MAIL	∅86.30 WAS ∅86.10	27.12.07	
TILT ANGLE	–	A	1.	E–MAIL	900 ± 10 ML WAS 895±10 AS PER CUST. REQ	27.12.07	CHK.
MAXIMUM DEPTH OF STANDARD ENGRAVING	–	FILL–POINT			–– ± –– ML.		
MAX. GAS VOLUMES	–	BRIMFUL CAP.			900 ± 10 ML (A)		
REF DRG No : CD–6108		WEIGHT			460 ± 18 GMS.		
MOULD EQUIPMENT ORDERED BY		FINISH			STD. CROWN BEVERAGE		
PLANT B		SURFACE TREATMENT			NO	COM. CODE NO. : 42915	

SPECIFICATION AGREEMENT ARE BASED ON TOLERANCED DIMENSIONS ONLY
DO NOT SCALE DRAWING
COPYRIGHT RESERVED, NOT TO BE COPIED IN WHOLE OR PART WITHOUT WRITTEN PERMISSION FROM H. N. G. I. LTD.

HINDUSTHAN NATIONAL GLASS & INDUSTRIES LIMITED

TITLE :1 KG T.K. G.M. BOTTLE No.1

CUSTOMER : M/s.

CHECKED: APPROVED:

DRAWN :Pravendra | DATE : 27.08.2007 | COLOUR : FLINT | SHEET : A3S

DRAWING No. : 42915 | REV. B